	FABRICATION	WELDING
TIME ESTIMATE	hrs	hrs
TIME ACTUAL		

WEIGHT: kg

ALL DIMENSIONS ARE IN-mm

SHEET 1 OF 1

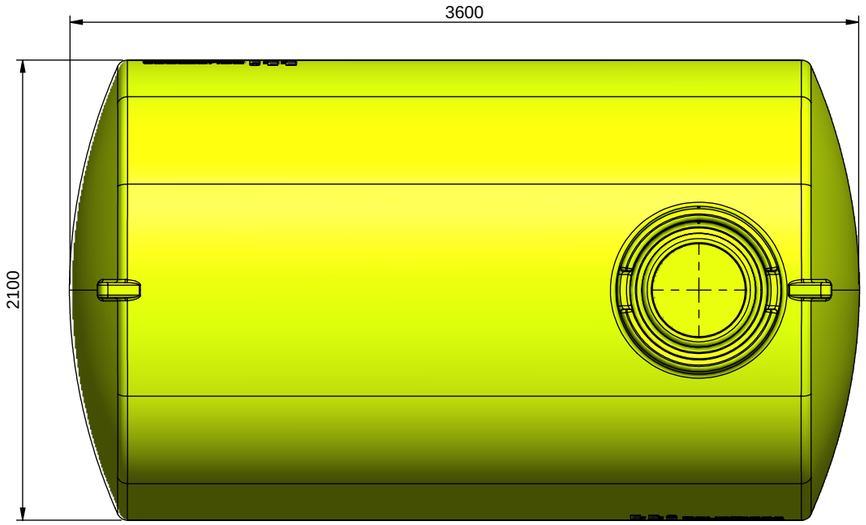

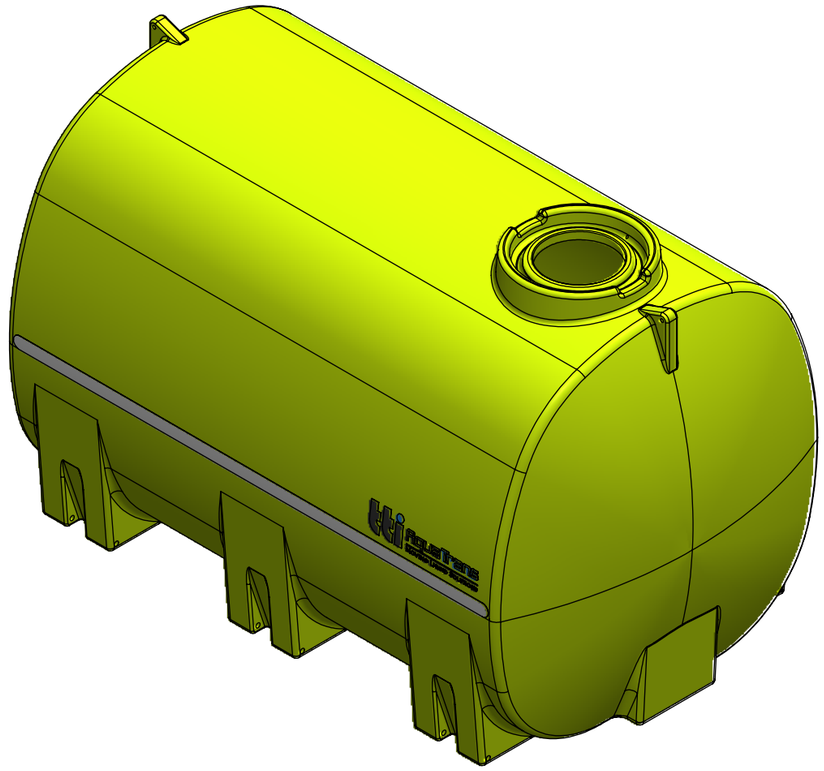

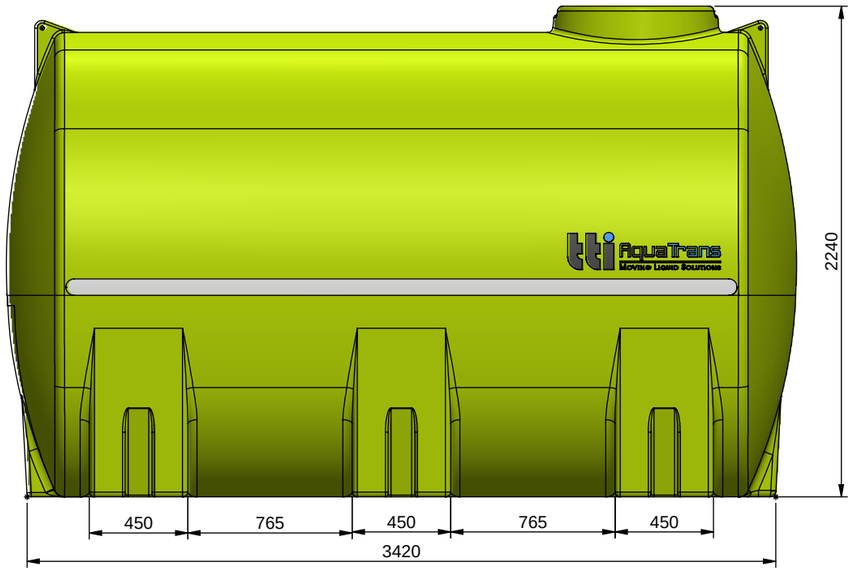

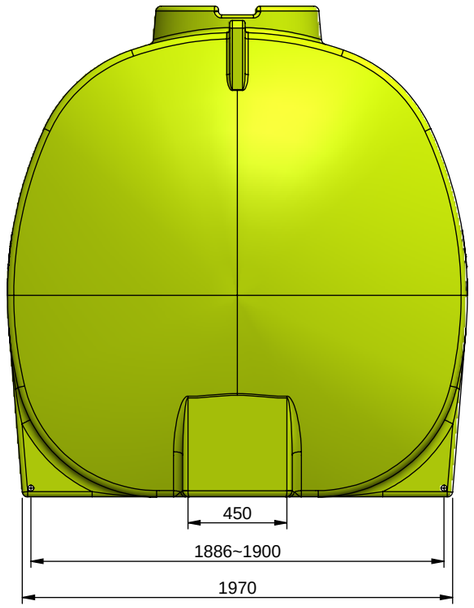

MATERIAL:
MATERIAL SIZE:
FINISH:

NOTES:
1. WORK TO DIMENSIONS. DO NOT SCALE.
2. REMOVE ALL VISIBLE BURRS.
3. ALL EXTERNAL WELDS TO BE FULLY WELDED AND FILLET SIZE TO BE THE SIZE OF MINIMUM MATERIAL THICKNESS, BUT NO LESS THAN 4mm, U.O.S
4. ALL PIPEWORK TO BE FULL PEN BUTT WELDS

GENERAL TOLERANCES UNLESS NOTED
Â 0 Ñ1
Â 0.0 Ñ0.5
Â 0.00 Ñ0.25
Â ANGLE Ñ1/2Â
Â FINISH 3.2Õm

NOTES	REV	DESCRIPTION	DRN	CHK/APP	DATE

TransTank International
Australia's Safest Tanks and Trailers

This drawing is the property of TransTank International. It cannot be copied in part or in full with out the written permission of TTI.

SCALE	NONE	JOB NO.			REVISION
SHT SIZE	A3				
DATE	26/03/2019	DESCRIPTION			
DRN	ED	12000L TIPPER TANK			
CHK	JH/HS	ASSY	ST/TT		ITEM CODE
FAB	WH	PURC	EW		PTC12000SG